1060 MAIN STREET
MILLIS, MA
SITE PLAN

JULY 10, 2023

For Registry Use

PREPARED BY:
LEGACY ENGINEERING LLC
730 MAIN STREET, SUITE 2C
MILLIS, MA 02054

PREPARED FOR:
1060 MAIN STREET REALTY, LLC
10 SPRINGDALE AVENUE
DOVER, MA 02030

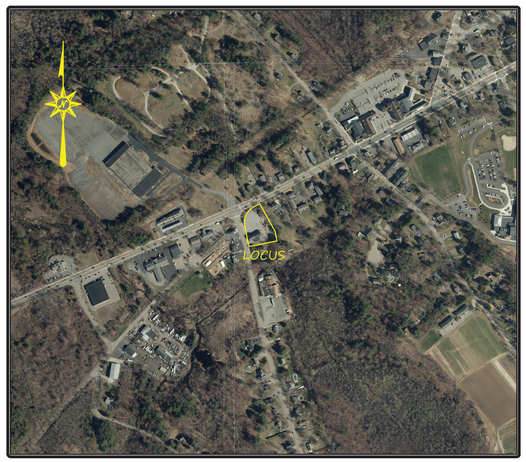

2021 MASSGIS AERIAL LOCUS
SCALE: 1" = 500'

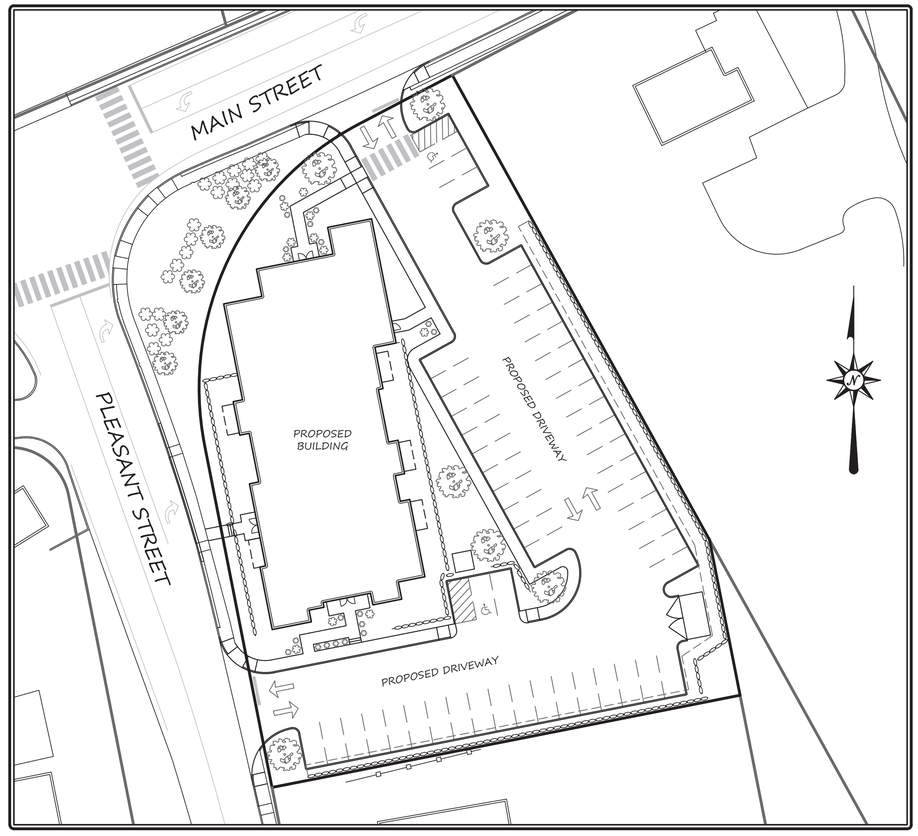

LOCUS
SCALE: 1" = 30'

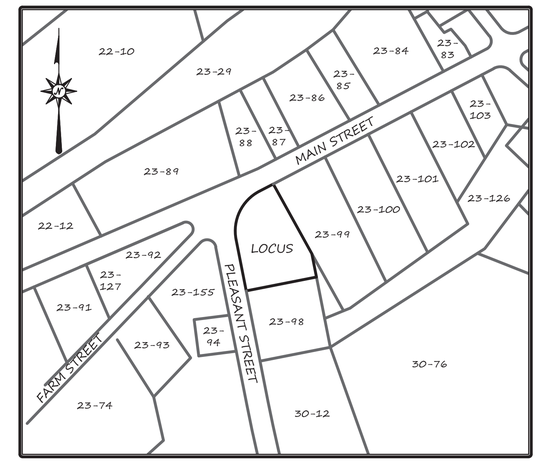

MILLIS ASSESSORS LOCUS
SCALE: 1" = 200'

PLAN SCALE: AS NOTED

PLAN DATE: JULY 10, 2023

REVISION	DATE	BY

COMMONWEALTH OF MASSACHUSETTS
DANIEL J. MERRIKIN
CIVIL
No. 43309
REGISTERED PROFESSIONAL ENGINEER

Digitally signed by Daniel J. Merrikin, P.E.
Date: 2023.07.10 14:46:22 -04'00'

OWNER
NEXGEN REALTY TRUST
20 PLEASANT STREET
MILLIS, MA 02054

APPLICANT
1060 MAIN ST. REALTY, LLC
10 SPRINGDALE AVENUE
DOVER, MA 02030

ZONING DISTRICT
C-V
MCEOD OVERLAY
NOT IN GNDWTR. PROT. DISTRICT

ASSESSORS PARCEL
23-96

DEED REFERENCE
BOOK 16088, PAGE 160

DATE APPROVED: _____

DATE ENDORSED: _____

_____
_____
_____
_____
_____
MILLIS ZONING BOARD

1060 MAIN STREET
COVER
PLAN OF LAND
IN
MILLIS, MA

I CERTIFY THAT THIS PLAN HAS BEEN PREPARED IN CONFORMITY WITH THE RULES AND REGULATIONS OF THE REGISTERS OF DEEDS OF THE COMMONWEALTH OF MASSACHUSETTS.

I CERTIFY THAT THIS SURVEY AND PLAN CONFORMS TO THE ETHICAL, PROCEDURAL AND TECHNICAL STANDARDS IN THE COMMONWEALTH OF MASSACHUSETTS.

I HEREBY CERTIFY THAT THE PROPERTY LINES SHOWN ON THIS PLAN ARE THE LINES DIVIDING EXISTING OWNERSHIPS, AND THE LINES OF THE STREETS AND WAYS SHOWN ARE THOSE OF PUBLIC OR PRIVATE STREETS OR WAYS ALREADY ESTABLISHED, AND THAT NO NEW LINES FOR DIVISION OF EXISTING OWNERSHIP OR FOR NEW WAYS ARE SHOWN.

_____
REGISTERED LAND SURVEYOR

SHEET LEGEND

C-0: COVER SHEET
C-1: EXISTING CONDITIONS PLAN
C-2: LAYOUT PLAN
C-3: GRADING PLAN
C-4: UTILITY PLAN
C-5: LIGHTING PLAN
C-6: EROSION CONTROLS
C-7: DETAILS
C-8: DETAILS
C-9: DETAILS

730 MAIN STREET
SUITE 2C
MILLIS, MA 02054
508-376-8883(o)

C-0

LEGACY ENGINEERING

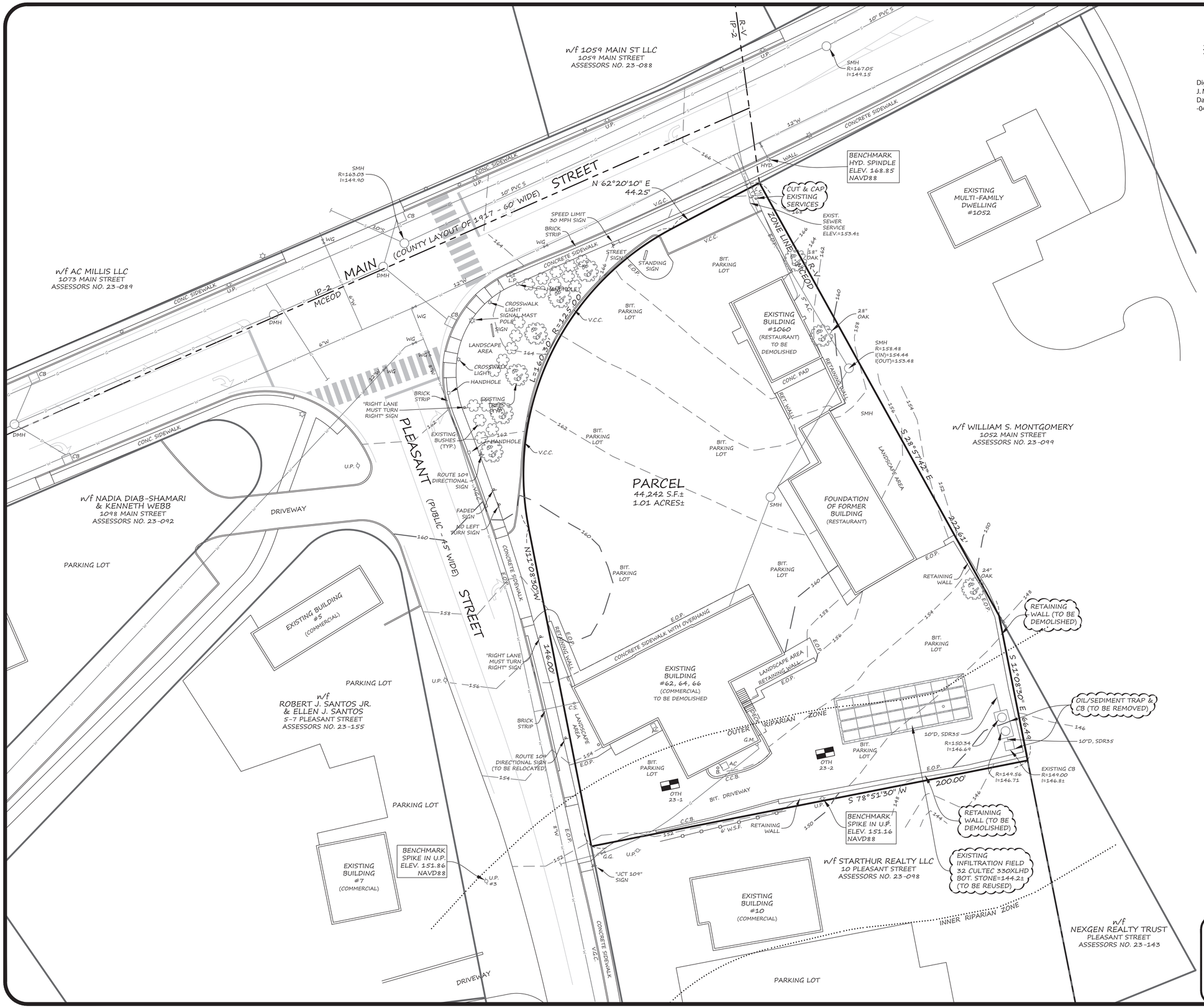

DANIEL J. MERRIKIN CIVIL No. 43309 COMMONWEALTH OF MASSACHUSETTS REGISTERED PROFESSIONAL ENGINEER

Digitally signed by Daniel J. Merrikin, P.E.
Date: 2023.07.10 14:45:40 -04'00'

For Registry Use

OWNER
NEXGEN REALTY TRUST
20 PLEASANT STREET
MILLIS, MA 02054

APPLICANT
1060 MAIN ST. REALTY, LLC
10 SPRINGDALE AVENUE
DOVER, MA 02030

ZONING DISTRICT
C-V
MCEOD OVERLAY
NOT IN GNDWTR. PROT. DISTRICT

ASSESSORS PARCEL
23-96

DEED REFERENCE
BOOK 16088, PAGE 160

I CERTIFY THAT THIS PLAN HAS BEEN PREPARED IN CONFORMITY WITH THE RULES AND REGULATIONS OF THE REGISTERS OF DEEDS OF THE COMMONWEALTH OF MASSACHUSETTS.

I CERTIFY THAT THIS SURVEY AND PLAN CONFORMS TO THE ETHICAL, PROCEDURAL AND TECHNICAL STANDARDS IN THE COMMONWEALTH OF MASSACHUSETTS.

I HEREBY CERTIFY THAT THE PROPERTY LINES SHOWN ON THIS PLAN ARE THE LINES DIVIDING EXISTING OWNERSHIPS, AND THE LINES OF THE STREETS AND WAYS SHOWN ARE THOSE OF PUBLIC OR PRIVATE STREETS OR WAYS ALREADY ESTABLISHED, AND THAT NO NEW LINES FOR DIVISION OF EXISTING OWNERSHIP OR FOR NEW WAYS ARE SHOWN.

REGISTERED LAND SURVEYOR

PLAN SCALE: 1" = 20'
0' 20' 40' 80'

PLAN DATE: JULY 10, 2023

REVISION	DATE	BY

LEGEND & ABBREVIATIONS

CB: SINGLE-GRATE CATCH BASIN
CB: DOUBLE-GRATE CATCH BASIN
PTU xxx: PROPRIETARY STORMWATER UNIT
DMH: DRAIN MANHOLE
TR. DR.: TRENCH DRAIN
INFIL. TR.: INFILTRATION TRENCH
X" D DRAIN PIPELINE
RCP: REINFORCED CONCRETE PIPE
PVC: POLYVINYL CHLORIDE PIPE
SMH: SEWER MANHOLE
X" S SEWER PIPELINE
C.O.: SEWER SERVICE CLEANOUT
X" W WATER MAIN
HYD: HYDRANT
G.V.: WATER GATE VALVE
C.S.: WATER SERVICE CURB STOP
M.B.: WATER SERVICE METER BOX
G GAS PIPELINE
E ELECTRIC CONDUIT
L.P.: LIGHT POLE
U.P.: UTILITY POLE
G.Y.: GUY WIRE
S.P.: TRAFFIC SIGNAL POLE
252 EXISTING CONTOUR
252 PROPOSED CONTOUR

E.O.P.	EDGE OF PAVEMENT
C.C.B.	INTEGRAL SLOPED BIT. BERM
V.B.B.	VERTICAL BITUMINOUS BERM
S.G.C.	SLOPED GRANITE CURB
V.G.C.	VERTICAL GRANITE CURB
V.C.C.	VERTICAL CONCRETE CURB
E.C.S.	EDGE CONCRETE SLAB
G.V.	GATE VALVE
C.L.F.	CHAIN LINK FENCE
W.S.F.	WOOD STOCKADE FENCE
P.P.F.	PVC PICKET FENCE
G.R.	GUARD RAIL
C.C.	HANDICAP CURB CUT

EXISTING CONDITIONS NOTES:

1. EXISTING UTILITY INFORMATION IS BASED ON BEST AVAILABLE INFORMATION INCLUDING VISIBLE SURFACE FEATURES AND RECORD PLANS. CONTRACTOR SHALL VERIFY ALL UTILITY LOCATIONS AND SHALL CONTACT DIGSAFE PRIOR TO ANY EXCAVATION ACTIVITY.

1060 MAIN STREET EXISTING CONDITIONS PLAN OF LAND IN MILLIS, MA

730 MAIN STREET
SUITE 2C
MILLIS, MA 02054
508-376-8883(o)

LEGACY ENGINEERING

C-1

ACCESSIBILITY NOTES:

1. ALL WALKWAYS/SIDEWALKS AND ASSOCIATED CURB CUTS ARE CONSIDERED ACCESSIBLE ROUTES AND SHALL FULLY COMPLY WITH MASSACHUSETTS ARCHITECTURAL ACCESS BOARD (AAB) RULES AND REGULATIONS, 521 CMR.
2. ALL WALKWAYS/SIDEWALKS/CURB CUT RAMPS SHALL BE CONCRETE UNLESS OTHERWISE NOTED.
3. AAB REGULATIONS DO NOT ALLOW ANY TOLERANCE ON SLOPE REQUIREMENTS AND THE MAXIMUM SLOPES CANNOT BE EXCEEDED.
4. IT IS RECOMMENDED THAT THE CONTRACTOR USE A DIGITAL LEVEL TO VERIFY SLOPE OF FORMS PRIOR TO PLACEMENT OF CONCRETE.
5. WALKWAYS/SIDEWALKS SHALL BE 5 FEET WIDE (EXCLUDING CURB) UNLESS OTHERWISE NOTED.
6. WALKWAYS/SIDEWALKS SHALL PROVIDE A MINIMUM OF 36 INCHES CLEAR (EXCLUDING ADJACENT CURB STONES), UNOBSTRUCTED PATH OF TRAVEL PAST ALL OBSTRUCTIONS (I.E. UTILITY POLES, SIGNS, FIRE HYDRANTS, ETC...)
7. WALKWAYS/SIDEWALKS SHALL HAVE A RUNNING SLOPE OF LESS THAN 4.5% AND A CROSS SLOPE LESS THAN 1.5%. IN NO INSTANCE SHALL THE MINIMUM SLOPE IN ANY DIRECTION BE LESS THAN 1%.
8. TRANSITIONS FROM CURB CUTS TO WALKWAYS/SIDEWALKS AND GUTTERS SHALL BE FLUSH.
9. UPON COMPLETION OF THE SITE WORK, THE GENERAL CONTRACTOR SHALL CERTIFY IN WRITING TO THE ARCHITECT AND OWNER THAT ALL ACCESSIBLE PARKING SPACES AND ACCESSIBLE ROUTES INCLUDING ALL WALKWAYS/SIDEWALKS, CURB CUTS, PLAY AREAS, RECREATIONAL AREA, RAMPS AND ENTRANCES HAVE BEEN CONSTRUCTED IN STRICT COMPLIANCE WITH THE MASSACHUSETTS ARCHITECTURAL ACCESS BOARD REGULATIONS 521 CMR.

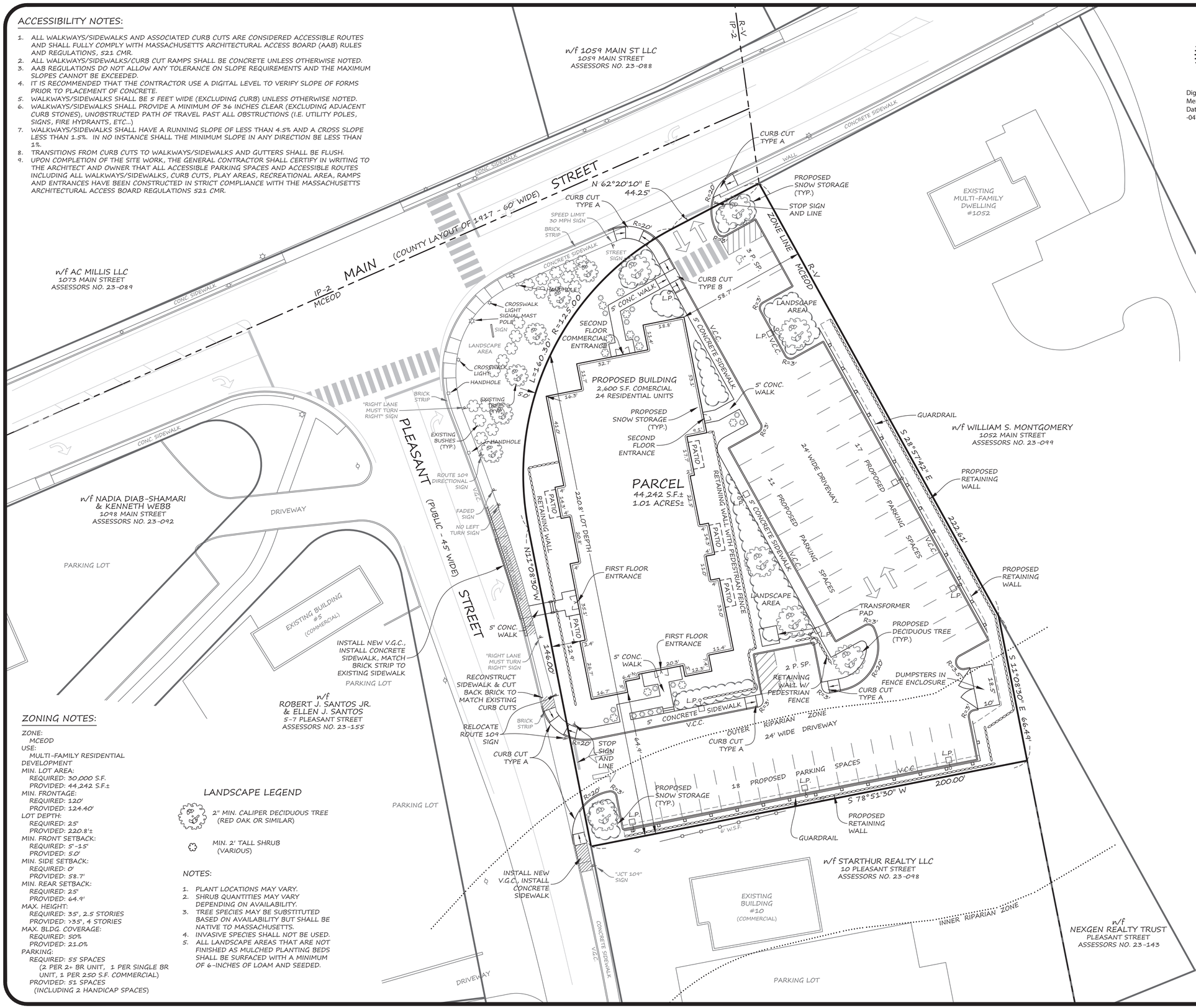

ZONING NOTES:

ZONE:
MCEOD
USE:
MULTI-FAMILY RESIDENTIAL DEVELOPMENT
MIN. LOT AREA:
REQUIRED: 30,000 S.F.
PROVIDED: 44,242 S.F.±
MIN. FRONTAGE:
REQUIRED: 120'
PROVIDED: 124.40'
LOT DEPTH:
REQUIRED: 25'
PROVIDED: 220.8'±
MIN. FRONT SETBACK:
REQUIRED: 5'-15'
PROVIDED: 5.0'
MIN. SIDE SETBACK:
REQUIRED: 0'
PROVIDED: 58.7'
MIN. REAR SETBACK:
REQUIRED: 25'
PROVIDED: 64.9'
MAX. HEIGHT:
REQUIRED: 35', 2.5 STORIES
PROVIDED: >35', 4 STORIES
MAX. BLDG. COVERAGE:
REQUIRED: 50%
PROVIDED: 21.0%
PARKING:
REQUIRED: 55 SPACES
(2 PER 2+ BR UNIT, 1 PER SINGLE BR UNIT, 1 PER 250 S.F. COMMERCIAL)
PROVIDED: 51 SPACES
(INCLUDING 2 HANDICAP SPACES)

LANDSCAPE LEGEND

2" MIN. CALIPER DECIDUOUS TREE (RED OAK OR SIMILAR)

MIN. 2' TALL SHRUB (VARIOUS)

NOTES:

1. PLANT LOCATIONS MAY VARY.
2. SHRUB QUANTITIES MAY VARY DEPENDING ON AVAILABILITY.
3. TREE SPECIES MAY BE SUBSTITUTED BASED ON AVAILABILITY BUT SHALL BE NATIVE TO MASSACHUSETTS.
4. INVASIVE SPECIES SHALL NOT BE USED.
5. ALL LANDSCAPE AREAS THAT ARE NOT FINISHED AS MULCHED PLANTING BEDS SHALL BE SURFACED WITH A MINIMUM OF 6-INCHES OF LOAM AND SEEDED.

COMMONWEALTH OF MASSACHUSETTS
DANIEL J. MERRIKIN
CIVIL
No. 43309
REGISTERED PROFESSIONAL ENGINEER

Digitally signed by Daniel J. Merrikin, P.E.
Date: 2023.07.10 14:45:23 -04'00'

For Registry Use

OWNER
NEXGEN REALTY TRUST
20 PLEASANT STREET
MILLIS, MA 02054

APPLICANT
1060 MAIN ST. REALTY, LLC
10 SPRINGDALE AVENUE
DOVER, MA 02030

ZONING DISTRICT
C-V
MCEOD OVERLAY
NOT IN GNDWTR. PROT. DISTRICT

ASSESSORS PARCEL
23-96

DEED REFERENCE
BOOK 16088, PAGE 160

I CERTIFY THAT THIS PLAN HAS BEEN PREPARED IN CONFORMITY WITH THE RULES AND REGULATIONS OF THE REGISTERS OF DEEDS OF THE COMMONWEALTH OF MASSACHUSETTS.

I CERTIFY THAT THIS SURVEY AND PLAN CONFORMS TO THE ETHICAL, PROCEDURAL AND TECHNICAL STANDARDS IN THE COMMONWEALTH OF MASSACHUSETTS.

I HEREBY CERTIFY THAT THE PROPERTY LINES SHOWN ON THIS PLAN ARE THE LINES DIVIDING EXISTING OWNERSHIPS, AND THE LINES OF THE STREETS AND WAYS SHOWN ARE THOSE OF PUBLIC OR PRIVATE STREETS OR WAYS ALREADY ESTABLISHED, AND THAT NO NEW LINES FOR DIVISION OF EXISTING OWNERSHIP OR FOR NEW WAYS ARE SHOWN.

REGISTERED LAND SURVEYOR

PLAN SCALE: 1" = 20'
0' 20' 40' 80'

REVISION	DATE	BY

PLAN DATE: JULY 10, 2023

LAYOUT NOTES

1. ALL PARKING SPACES SHALL BE 9' WIDE x 18' DEEP EXCEPT HANDICAP SPACES, WHICH SHALL BE 8' WIDE (EXCLUSIVE OF ADJACENT ACCESS AISLE). ALL HANDICAP ACCESS AISLES ADJACENT TO HANDICAP PARKING SPACES SHALL BE 18' DEEP AND 8' WIDE (VAN ACCESSIBLE).

SNOW STORAGE NOTES

1. SNOW MAY BE LEFT IN REASONABLY SIZED WINDROWS ALONG THE EDGE OF DRIVEWAYS AND PARKING AREAS. SUCH WINDROWS SHALL NOT INTERFERE WITH PARKING.
2. SNOW MAY BE PILED IN THE VARIOUS SNOW STORAGE AREAS SHOWN HEREON.
3. SNOW ACCUMULATION MAY NOT INTERFERE WITH PARKING OR TURNING MOVEMENTS AT INTERSECTIONS.
4. AT SUCH TIME AS SNOW ACCUMULATIONS EXCEED THE CAPACITY OF ON-SITE STORAGE AREAS, SUCH EXCESS SNOW SHALL BE REMOVED FROM THE SITE AND DISPOSED OF IN ACCORDANCE WITH STATE, LOCAL AND FEDERAL LAWS AND REGULATIONS.

1060 MAIN STREET LAYOUT PLAN OF LAND IN MILLIS, MA

730 MAIN STREET
SUITE 2C
MILLIS, MA 02054
508-376-8883(o)

C-2

LEGACY ENGINEERING

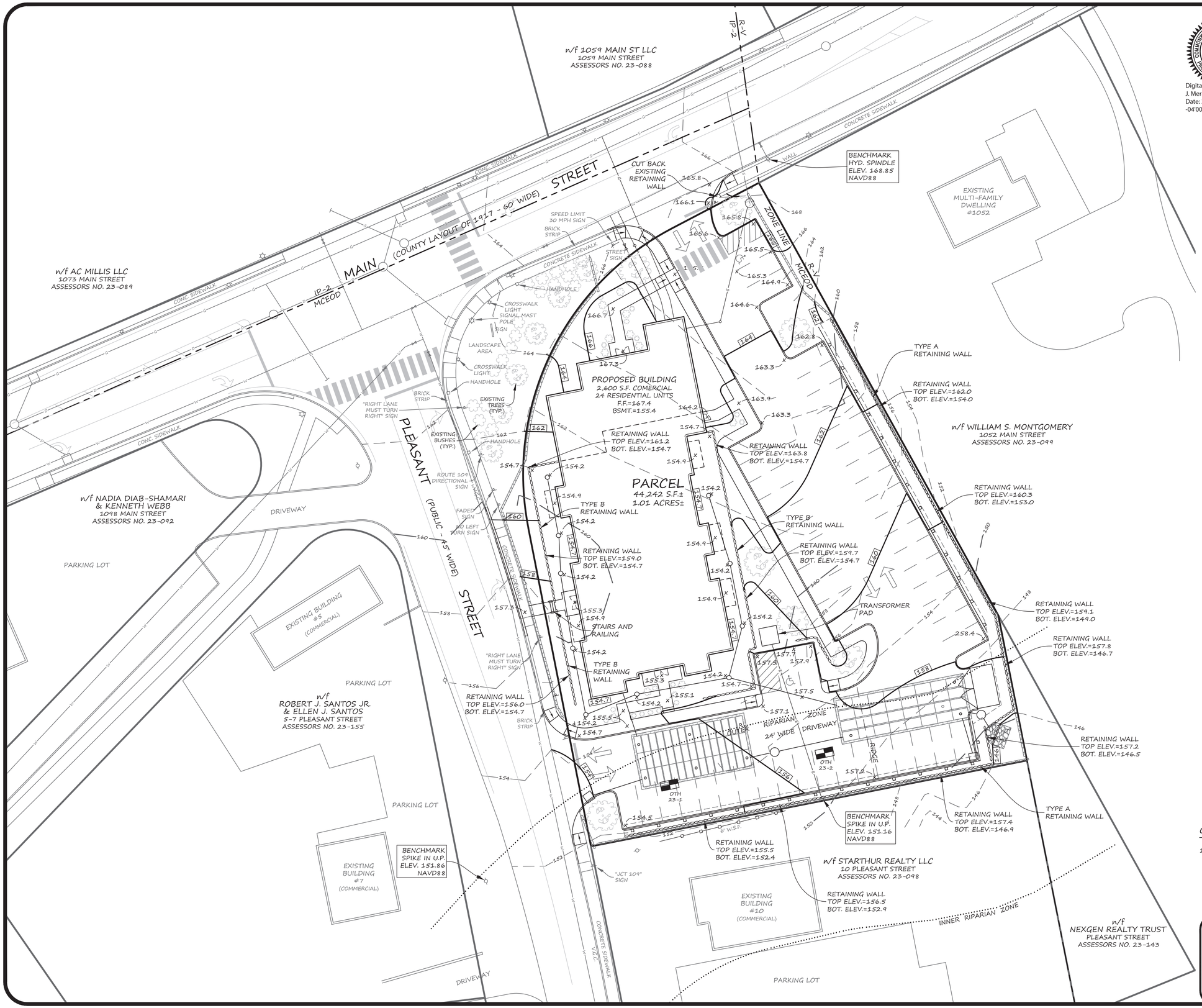

COMMONWEALTH OF MASSACHUSETTS
DANIEL J. MERRIKIN
CIVIL
No. 43309
REGISTERED PROFESSIONAL ENGINEER

Digitally signed by Daniel J. Merrikin, P.E.
Date: 2023.07.10 14:45:05 -04'00'

For Registry Use

OWNER
NEXGEN REALTY TRUST
20 PLEASANT STREET
MILLIS, MA 02054

APPLICANT
1060 MAIN ST. REALTY, LLC
10 SPRINGDALE AVENUE
DOVER, MA 02030

ZONING DISTRICT
C-V
MCEOD OVERLAY
NOT IN GNDWTR. PROT. DISTRICT

ASSESSORS PARCEL
23-96

DEED REFERENCE
BOOK 16088, PAGE 160

I CERTIFY THAT THIS PLAN HAS BEEN PREPARED IN CONFORMITY WITH THE RULES AND REGULATIONS OF THE REGISTERS OF DEEDS OF THE COMMONWEALTH OF MASSACHUSETTS.

I CERTIFY THAT THIS SURVEY AND PLAN CONFORMS TO THE ETHICAL, PROCEDURAL AND TECHNICAL STANDARDS IN THE COMMONWEALTH OF MASSACHUSETTS.

I HEREBY CERTIFY THAT THE PROPERTY LINES SHOWN ON THIS PLAN ARE THE LINES DIVIDING EXISTING OWNERSHIPS, AND THE LINES OF THE STREETS AND WAYS SHOWN ARE THOSE OF PUBLIC OR PRIVATE STREETS OR WAYS ALREADY ESTABLISHED, AND THAT NO NEW LINES FOR DIVISION OF EXISTING OWNERSHIP OR FOR NEW WAYS ARE SHOWN.

REGISTERED LAND SURVEYOR

PLAN SCALE: 1" = 20'
0' 20' 40' 80'

PLAN DATE: JULY 10, 2023

REVISION	DATE	BY

1060 MAIN STREET GRADING PLAN OF LAND IN MILLIS, MA

GRADING NOTES:

1. IT IS ESTIMATED THAT THE TOTAL CUT VOLUME FOR THE SITE WILL BE APPROXIMATELY 2,900 CUBIC YARDS. THE ESTIMATED TOTAL FILL VOLUME FOR THE SITE WILL BE APPROXIMATELY 3,200 CUBIC YARDS. THE REQUIRED TOTAL IMPORTED SOILS TO THE SITE IS APPROXIMATELY 300 CUBIC YARDS.

730 MAIN STREET
SUITE 2C
MILLIS, MA 02054
508-376-8883(o)

C-3

LEGACY ENGINEERING

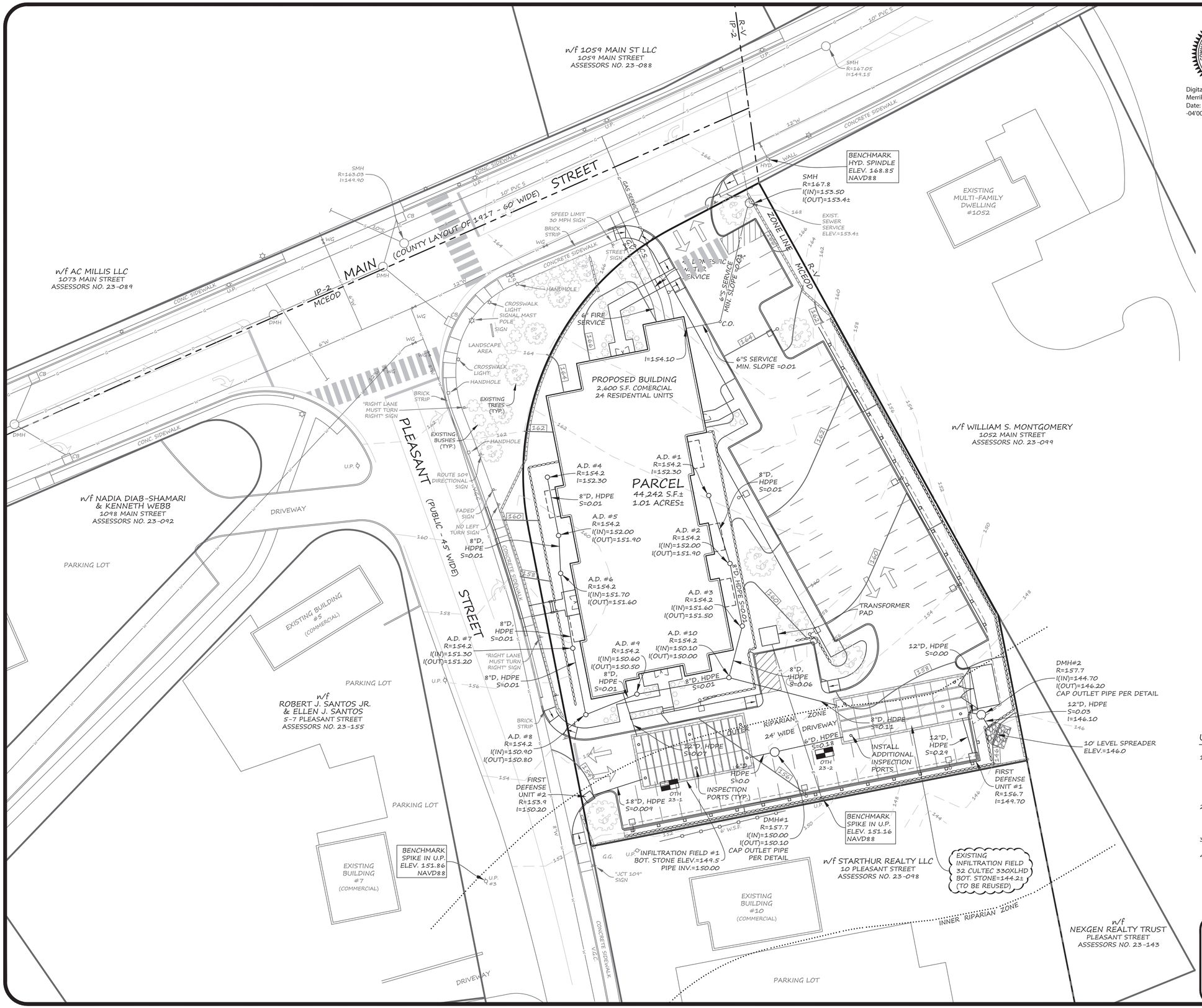

Digitally signed by Daniel J. Merrikin, P.E.
Date: 2023.07.10 14:44:48 -04'00'

COMMONWEALTH OF MASSACHUSETTS
DANIEL J. MERRIKIN
CIVIL
No. 43309
REGISTERED PROFESSIONAL ENGINEER

For Registry Use

OWNER
NEXGEN REALTY TRUST
20 PLEASANT STREET
MILLIS, MA 02054

APPLICANT
1060 MAIN ST. REALTY, LLC
10 SPRINGDALE AVENUE
DOVER, MA 02030

ZONING DISTRICT
C-V
MCEOD OVERLAY
NOT IN GNDWTR. PROT. DISTRICT

ASSESSORS PARCEL
23-96

DEED REFERENCE
BOOK 16088, PAGE 160

I CERTIFY THAT THIS PLAN HAS BEEN PREPARED IN CONFORMITY WITH THE RULES AND REGULATIONS OF THE REGISTERS OF DEEDS OF THE COMMONWEALTH OF MASSACHUSETTS.

I CERTIFY THAT THIS SURVEY AND PLAN CONFORMS TO THE ETHICAL, PROCEDURAL AND TECHNICAL STANDARDS IN THE COMMONWEALTH OF MASSACHUSETTS.

I HEREBY CERTIFY THAT THE PROPERTY LINES SHOWN ON THIS PLAN ARE THE LINES DIVIDING EXISTING OWNERSHIPS, AND THE LINES OF THE STREETS AND WAYS SHOWN ARE THOSE OF PUBLIC OR PRIVATE STREETS OR WAYS ALREADY ESTABLISHED, AND THAT NO NEW LINES FOR DIVISION OF EXISTING OWNERSHIP OR FOR NEW WAYS ARE SHOWN.

REGISTERED LAND SURVEYOR

PLAN SCALE: 1" = 20'
0' 20' 40' 80'

PLAN DATE: JULY 10, 2023

REVISION	DATE	BY

UTILITY NOTES:

1. WATER SERVICES SHALL BE DUCTILE IRON IN ACCORDANCE WITH THE REQUIREMENTS OF THE SEWER AND WATER DEPARTMENT. THE PROJECT ARCHITECT SHALL VERIFY THE DOMESTIC, IRRIGATION AND FIRE WATER SERVICE PIPE SIZE REQUIREMENTS FOR THE BUILDINGS.
2. SEWER SERVICE SHALL BE 6-INCH SDR35 PIPE IN ACCORDANCE WITH THE REQUIREMENTS OF THE SEWER AND WATER DEPARTMENT. CLEANOUTS SHALL BE POSITIONED IN LANDSCAPE AREAS.
3. DRAINAGE PIPING SHALL BE HDPE RATED FOR H20 LOADING. (ADS N12 OR EQUAL)
4. THE ELECTRIC COMPANY SHALL DETERMINE THE FINAL LOCATION AND DESIGN OF THE ELECTRIC SERVICE AND TRANSFORMER. SHOWN ELECTRIC LINE AND TRANSFORMER LOCATIONS ARE POTENTIAL. CONDUITS TO PROPOSED LIGHT POLES SHALL BE DESIGNED BY THE ARCHITECT.

1060 MAIN STREET UTILITY PLAN OF LAND IN MILLIS, MA

730 MAIN STREET
SUITE 2C
MILLIS, MA 02054
508-376-8883(o)

LEGACY ENGINEERING

LUMINAIRE SCHEDULE

CALLOUT	SYMBOL	LAMP	MOUNTING	MODEL	QUANTITY
P1		(6) SIX WHITE MULTI-CHIP LIGHT EMITTING DIODES (LEDS)	POLE - SINGLE FIXTURE	RAB LIGHTING INC., WPLED4T105 (TYPE IV)	9
P1		(6) SIX WHITE MULTI-CHIP LIGHT EMITTING DIODES (LEDS)	POLE - DOUBLE FIXTURE	RAB LIGHTING INC., WPLED4T105 (TYPE IV)	1

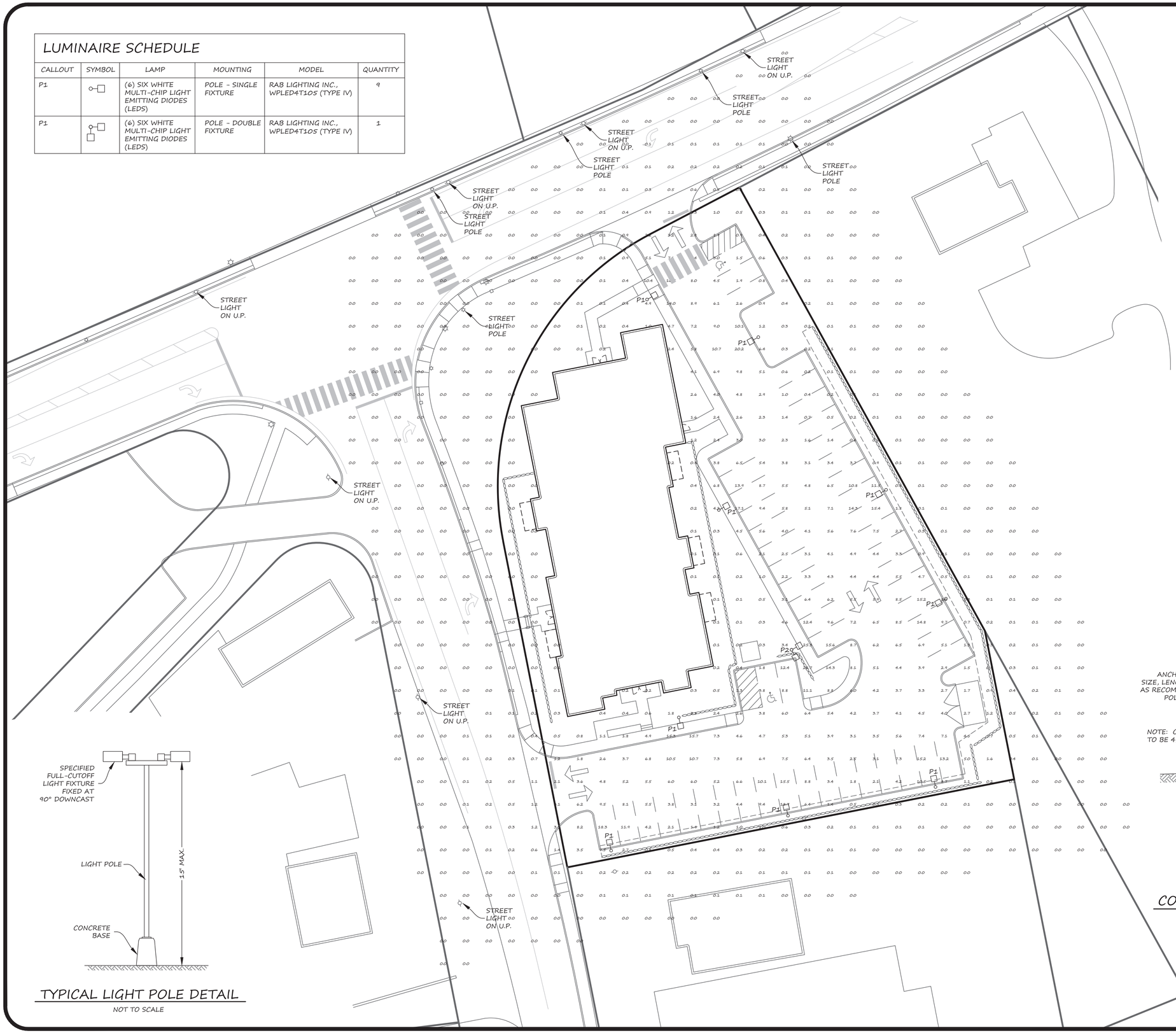

TYPICAL LIGHT POLE DETAIL

NOT TO SCALE

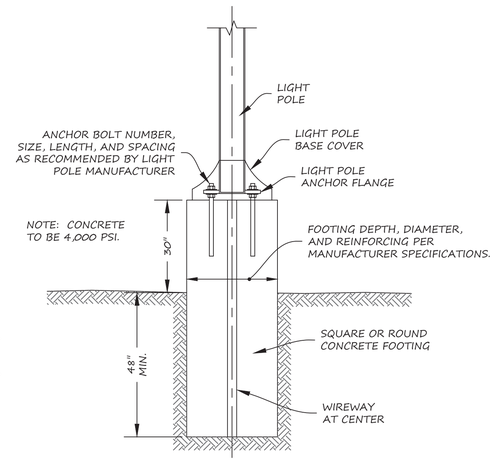

CONCRETE LIGHT POLE BASE DETAIL

NOT TO SCALE

COMMONWEALTH OF MASSACHUSETTS
DANIEL J. MERRIKIN
CIVIL
No. 43309
REGISTERED PROFESSIONAL ENGINEER

Digitally signed by Daniel J. Merrikin, P.E.
Date: 2023.07.10 14:44:30 -04'00'

For Registry Use

OWNER
NEXGEN REALTY TRUST
20 PLEASANT STREET
MILLIS, MA 02054

APPLICANT
1060 MAIN ST. REALTY, LLC
10 SPRINGDALE AVENUE
DOVER, MA 02030

ZONING DISTRICT
C-V
MCEOD OVERLAY
NOT IN GNDWTR. PROT. DISTRICT

ASSESSORS PARCEL
23-96

DEED REFERENCE
BOOK 16088, PAGE 160

I CERTIFY THAT THIS PLAN HAS BEEN PREPARED IN CONFORMITY WITH THE RULES AND REGULATIONS OF THE REGISTERS OF DEEDS OF THE COMMONWEALTH OF MASSACHUSETTS.

I CERTIFY THAT THIS SURVEY AND PLAN CONFORMS TO THE ETHICAL, PROCEDURAL AND TECHNICAL STANDARDS IN THE COMMONWEALTH OF MASSACHUSETTS.

I HEREBY CERTIFY THAT THE PROPERTY LINES SHOWN ON THIS PLAN ARE THE LINES DIVIDING EXISTING OWNERSHIPS, AND THE LINES OF THE STREETS AND WAYS SHOWN ARE THOSE OF PUBLIC OR PRIVATE STREETS OR WAYS ALREADY ESTABLISHED, AND THAT NO NEW LINES FOR DIVISION OF EXISTING OWNERSHIP OR FOR NEW WAYS ARE SHOWN.

REGISTERED LAND SURVEYOR

PLAN SCALE: 1" = 20'

0' 20' 40' 80'

PLAN DATE: JULY 10, 2023

REVISION	DATE	BY

1060 MAIN STREET LIGHTING PLAN OF LAND IN MILLIS, MA

730 MAIN STREET
SUITE 2C
MILLIS, MA 02054
508-376-8883(o)

C-5

LEGACY ENGINEERING

SEDIMENT & EROSION CONTROL NOTES

GENERAL
1. IF APPLICABLE (I.E. >1 ACRE OF DISTURBANCE), FOR COMPLETE EROSION CONTROL AND CONSTRUCTION ACTIVITY GUIDANCE, REFER TO THE SWPPP. OTHERWISE FOLLOW THE SITE PLAN.
2. FOR SWPPP PROJECTS, A NOTICE SHALL BE POSTED VISIBLE FROM A PUBLIC RIGHT-OF-WAY WITH CONTACT INFORMATION AND INSTRUCTIONS TO FIND A COPY OF THE SWPPP.

PHASING AND CONSTRUCTION SEQUENCE
1. PHASE 1 - CONSTRUCTION SEQUENCE
   - 1.1. STAKEOUT AND INSTALL EROSION AND PERIMETER CONTROLS (WHICH WILL DELINEATE THE LIMIT OF WORK FOR THE PROJECT);
   - 1.2. DEMARCATE THE LOCATION OF EXISTING UTILITIES ON AND AROUND THE CONSTRUCTION AREA;
   - 1.3. CLEAR THE PROPOSED ENTRY AREAS AND INSTALL THE CONSTRUCTION ENTRANCE APRON(S);
   - 1.4. CLEAR AND GRUB THE DEVELOPMENT AREA;
   - 1.5. STRIP AND STOCKPILE TOPSOIL;
   - 1.6. COMMENCE ROUGH GRADING TO SUB-GRADE ELEVATIONS;
   - 1.7. INSTALL BUILDING FOUNDATION(S) AND BEGIN BUILDING CONSTRUCTION;
   - 1.8. INSTALL NEW SITE UTILITIES, INCLUDING THE STORMWATER MANAGEMENT SYSTEM;
   - 1.9. COMPLETE CONSTRUCTION OF NEW BUILDING(S);
   - 1.10. PAVE THE ROAD/DRIVEWAY AND SIDEWALK (IF APPLICABLE) TO BINDER COURSE;
   - 1.11. LOAM, SEED, AND STABILIZE DISTURBED AREAS, INCLUDING ALL SITE LANDSCAPING;
   - 1.12. CLEANOUT ALL CATCH BASINS AND NEW STORMWATER BMPs IN THE PORTION OF THE SITE AFFECTED BY CONSTRUCTION ACTIVITIES AFTER THE SITE IS FULLY STABILIZED.

PERIMETER EROSION CONTROL AND SEDIMENT CONTROLS
1. PERIMETER EROSION AND SEDIMENT CONTROL BARRIERS WILL BE PROVIDED, INSTALLED, AND MAINTAINED DOWNSTREAM OF ALL PROPOSED CONSTRUCTION ACTIVITIES IN ACCORDANCE WITH THE SWPPP (IF APPLICABLE), THE SITE PLAN, AND ALL PERMITS ISSUED FOR THE SITE DEVELOPMENT. SUCH CONTROLS MUST BE INSTALLED BEFORE ANY EARTH-DISTURBING ACTIVITIES OCCUR ON THE SITE IN QUESTION. EROSION AND SEDIMENT CONTROLS MAY BE INSTALLED IN PHASES SO LONG AS IT PRECEDES ANY EARTH-DISTURBING ACTIVITIES WITHIN THE CONTROLS' UPSTREAM WATERSHED.
2. SEDIMENT SHALL BE REMOVED ALONG SUCH CONTROLS ON A REGULAR BASIS. IN NO CASE, SHALL SEDIMENT BE ALLOWED TO REACH A DEPTH EQUAL TO ONE HALF OF THE ABOVE GROUND HEIGHT OF THE EROSION CONTROL DEVICE.

SITE ACCESS CONTROLS
1. CONSTRUCTION VEHICLES WILL USE DESIGNATED ENTRY POINTS FOR EACH SITE. CRUSHED STONE OR RIP-RAP ENTRY APRON(S) WILL BE INSTALLED AND PROPERLY MAINTAINED DURING CONSTRUCTION UNTIL THE SITE IS PAVED. ALL CONSTRUCTION ACCESS WILL BE VIA THE FRONTAGE PUBLIC ROAD STREET, WHICH WILL BE KEPT CLEAN AND SWEPT AS NEEDED TO MINIMIZE THE TRACKING OF SOILS AND DUST FROM THE SITE.

STOCKPILED SOILS
1. SOIL STOCKPILES TO BE LEFT IN PLACE MORE THAN 24 HOURS SHALL BE SURROUNDED WITH A LINE OF SILT FENCE OR COMPOST SOCK TO PREVENT THE PILES FROM ERODING INTO THE SITE AND TO DISCOURAGE ON-SITE RUNOFF FROM ERODING THE STOCKPILES. SOIL STOCKPILES TO BE LEFT IN PLACE MORE THAN 14 DAYS SHALL BE STABILIZED TEMPORARILY. DUST CONTROL MEASURES SHALL BE IMPLEMENTED TO PREVENT WIND EROSION OF THE STOCKPILES.

DUST CONTROL
1. DUST CONTROL MEASURES WILL BE IMPLEMENTED REGULARLY TO PREVENT THE OFF-SITE DEPOSITION OF WIND-ERODED SOILS. THE PRINCIPAL FORM OF DUST CONTROL WILL BE WATER APPLICATION.

DISTURBANCE OF STEEP SLOPES
1. CONTRACTORS MUST PAY CAREFUL ATTENTION TO STEEP SLOPES AND MUST IMPLEMENT ADDITIONAL TEMPORARY EROSION AND SEDIMENT CONTROL MEASURES DURING WORK ON STEEP SLOPES TO PREVENT EROSION. INSTALL EROSION CONTROL BLANKETS IF NEEDED.

SOIL COMPACTION
1. AREAS DESIGNATED FOR FINAL VEGETATIVE SURFACES OR CONSTRUCTION-STAGE OR FINAL STORMWATER INFILTRATION PRACTICES SHALL BE PROTECTED FROM EXCESSIVE COMPACTION BY RESTRICTING VEHICLE ACCESS AND THE TYPES OF EQUIPMENT THAT MAY BE USED IN SUCH AREAS. PRIOR TO SEEDING/PLANTING OF SUCH AREAS, EXPOSED SOIL THAT HAS BEEN COMPACTED SHALL BE LOOSENED BY TILLING OR OTHER SIMILAR METHODS. CONDITIONING SHALL CONSIST OF DEEP TILLING WITH A ROTARY TILLER, DISC HARROWING, OR MANUAL LOOSENING AND RE-GRADING WITH AN EXCAVATOR BUCKET. CONDITIONING SHALL EXTEND TO A DEPTH OF AT LEAST 12-INCHES.

PROTECTION OF STORM DRAIN INLETS
1. ALL STORM DRAIN SYSTEM INLETS INSIDE OF PERIMETER CONTROLS SHALL BE PROTECTED WITH SEDIMENT CONTROL MEASURES DESIGNED TO REMOVE SEDIMENT FROM STORMWATER PRIOR TO ENTERING THE INLET. CATCH BASINS ALONG THE STREET FRONTAGE SHALL ALSO BE PROTECTED. SUCH MEASURES SHALL BE PERIODICALLY MAINTAINED AND REPLACED AS NEEDED TO ENSURE THEIR PROPER FUNCTIONALITY. SEDIMENT SHALL BE REMOVED DAILY WHERE FOUND.

TEMPORARY STABILIZATION
1. FOR PERMANENTLY OR TEMPORARILY (14 DAYS) CEASED CONSTRUCTION ACTIVITIES, TEMPORARY SOIL STABILIZATION MEASURES WILL BE EMPLOYED AS SOON AS PRACTICABLE BUT NO LONGER THAN 14 CALENDAR DAYS AFTER STABILIZATION HAS BEEN INITIATED. WHERE APPLICABLE, SEE THE SWPPP FOR ADDITIONAL REQUIREMENTS.

MAINTENANCE OF EROSION & SEDIMENT CONTROL MEASURES
1. EROSION AND SEDIMENT CONTROL MEASURES WILL BE MAINTAINED IN GOOD CONDITION FOR THE DURATION OF THE CONSTRUCTION ACTIVITY AND UNTIL SUCH TIME AS THE UPSTREAM AREAS ACHIEVE FINAL STABILIZATION. SEDIMENT WILL BE REMOVED ALONG PERIMETER EROSION CONTROLS WHEN THE DEPTH EXCEEDS FOUR-INCHES. ALL CONTROL MEASURES WILL BE MAINTAINED IN EFFECTIVE OPERATING CONDITION. IF SITE INSPECTIONS IDENTIFY CONTROL MEASURES THAT ARE NOT OPERATING EFFECTIVELY OR FINDS OTHER PROBLEMS, THE CONTRACTOR MUST:
   - 1.1. INITIATE WORK TO CORRECT THE PROBLEM IMMEDIATELY UPON DISCOVERY AND COMPLETE THE WORK BY THE CLOSE OF THE NEXT WORK DAY IF THE PROBLEM CAN BE CORRECTED THROUGH ROUTINE MAINTENANCE;
   - 1.2. FOR MORE SIGNIFICANT REPAIRS OR WHERE INSPECTIONS DETERMINE THAT ADDITIONAL EROSION AND SEDIMENT CONTROLS ARE NEEDED, SUCH WORK MUST BE COMPLETED AND OPERATION NO LATER THAN 7 CALENDAR DAYS AFTER DISCOVERY OF THE PROBLEM.

POLLUTION PREVENTION
1. CONSTRUCTION STAGING AREAS WILL BE LIMITED IN QUANTITY AND WILL BE MAINTAINED IN A NEAT AND ORDERLY FASHION. REFER TO THE SITE PLAN FOR STAGING AREA LOCATION(S).
2. VEHICLES SHALL BE STORED IN FUELED IN DESIGNATED AREAS. MONITOR ALL EQUIPMENT FOR LEAKS. WHERE APPLICABLE, REFER TO THE SWPPP FOR ADDITIONAL VEHICLE STORAGE AREA REQUIREMENTS.
3. VEHICLE OR EQUIPMENT WASHING IS NOT ALLOWED ON-SITE.
4. MATERIALS AND EQUIPMENT SHALL BE STORED PROPERLY AND ORDERLY.
5. WHERE APPLICABLE, REFER TO THE SWPPP FOR
   - 5.1. FURTHER INSTRUCTIONS ON PROPER MATERIAL AND EQUIPMENT STORAGE.
   - 5.2. REFER TO THE SWPPP FOR DISPOSAL OF WASTE, INCLUDING HAZARDOUS WASTE.
   - 5.3. REFER TO THE SWPPP FOR SPILL PREVENTION AND RESPONSE PROCEDURES.

DEWATERING PRACTICES
1. THIS SITE IS NOT EXPECTED TO ENCOUNTER SIGNIFICANT QUANTITIES OF GROUNDWATER DURING CONSTRUCTION ACTIVITIES BUT IF IT DOES, THE FOLLOWING PRACTICES WILL BE IMPLEMENTED:
   - 1.1. DO NOT DISCHARGE ANY FLOATING SOLIDS OR FOAM;
   - 1.2. IF DEWATERING WATER IS FOUND TO CONTAIN OIL, GREASE, ETC... IT MUST BE FILTERED OR PASSED THROUGH AN OIL/WATER SEPARATOR PRIOR TO DISCHARGE;
   - 1.3. WHEREVER POSSIBLE, DISCHARGE DEWATERING WATER TO VEGETATED UPLAND AREAS FOR INFILTRATION. WHERE THIS IS NOT POSSIBLE, DISCHARGE DEWATERING WATER INTO A FILTERING PIT CONSISTING OF A PERIMETER OF DOUBLE ROWS OF HAYBALES LINED WITH THREE LAYERS OF FILTER FABRIC. DO NOT DIRECT DEWATERING WATER INTO WETLANDS WITHOUT PRIOR TREATMENT;
   - 1.4. VELOCITY DISSIPATION MEASURES MUST BE INCLUDED AT ALL DISCHARGE POINTS (RIP-RAP OR CRUSHED STONE APRON).

INSPECTIONS
1. WHERE APPLICABLE, REFER TO SWPPP FOR INSPECTION & REPORTING REQUIREMENTS IN ADDITION TO THE FOLLOWING:
   - 1.1. THE SITE SHALL BE INSPECTED AT LEAST ONCE EVERY 14 CALENDAR DAYS AND WITHIN 24 HOURS OF THE OCCURRENCE OF A STORM EVENT OF 0.25 INCHES OR GREATER. INSPECTIONS MAY BE REDUCED DURING THE WINTER AND IN STABILIZED AREAS.
   - 1.2. ANY DEFICIENCIES SHALL BE REMEDIED IMMEDIATELY AND NO LATER THAN 7 DAYS AFTER DISCOVERY OF THE DEFICIENCY, AND IF POSSIBLE, PRIOR TO THE NEXT RAINFALL EVENT.

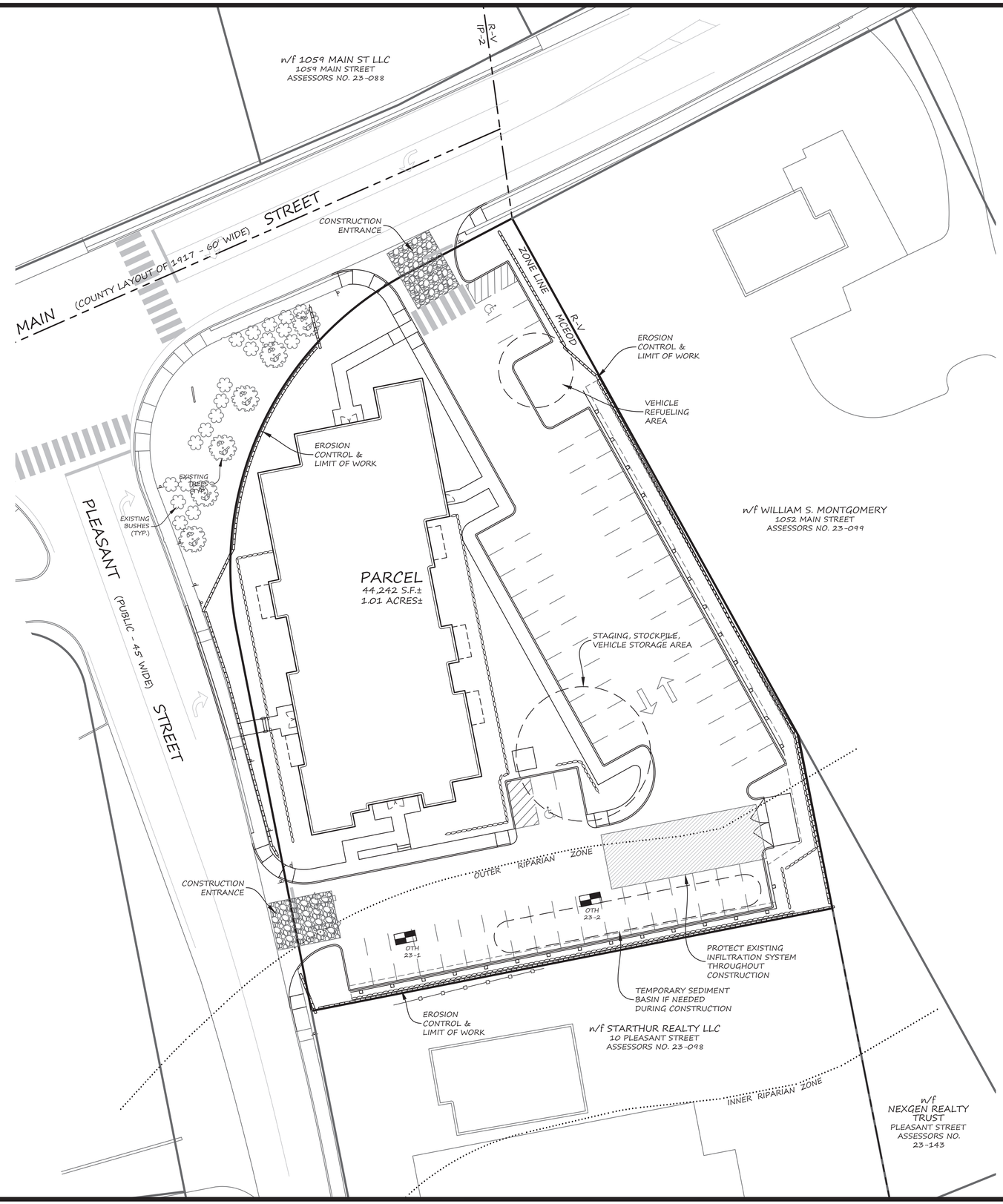

COMMONWEALTH OF MASSACHUSETTS
DANIEL J. MERRIKIN
CIVIL
No. 43309
REGISTERED PROFESSIONAL ENGINEER

Digitally signed by Daniel J. Merrikin, P.E.
Date: 2023.07.10 14:44:13 -04'00'

For Registry Use

OWNER
NEXGEN REALTY TRUST
20 PLEASANT STREET
MILLIS, MA 02054

APPLICANT
1060 MAIN ST. REALTY, LLC
10 SPRINGDALE AVENUE
DOVER, MA 02030

ZONING DISTRICT
C-V
MCEOD OVERLAY
NOT IN GNDWTR. PROT. DISTRICT

ASSESSORS PARCEL
23-96

DEED REFERENCE
BOOK 16088, PAGE 160

I CERTIFY THAT THIS PLAN HAS BEEN PREPARED IN CONFORMITY WITH THE RULES AND REGULATIONS OF THE REGISTERS OF DEEDS OF THE COMMONWEALTH OF MASSACHUSETTS.

I CERTIFY THAT THIS SURVEY AND PLAN CONFORMS TO THE ETHICAL, PROCEDURAL AND TECHNICAL STANDARDS IN THE COMMONWEALTH OF MASSACHUSETTS.

I HEREBY CERTIFY THAT THE PROPERTY LINES SHOWN ON THIS PLAN ARE THE LINES DIVIDING EXISTING OWNERSHIPS, AND THE LINES OF THE STREETS AND WAYS SHOWN ARE THOSE OF PUBLIC OR PRIVATE STREETS OR WAYS ALREADY ESTABLISHED, AND THAT NO NEW LINES FOR DIVISION OF EXISTING OWNERSHIP OR FOR NEW WAYS ARE SHOWN.

_____
REGISTERED LAND SURVEYOR

PLAN SCALE: 1" = 20'
0' 20' 40' 80'

PLAN DATE: JULY 10, 2023

REVISION	DATE	BY

CONSTRUCTION NOTES:
1. ANY ACCESS TO AN EXCAVATED AREA OR AREAS SHALL BE ADEQUATELY POSTED WITH "KEEP OUT" AND "DANGER" SIGNS.
2. NO BOULDERS IN EXCESS OF 20 CUBIC YARDS AND NO TREES OR STUMPS OR DEMOLITION OR CONSTRUCTION WASTE MATERIALS SHALL BE BURIED ON-SITE.

CONSTRUCTION MITIGATION PLAN NOTES:
1. NO BLASTING IS EXPECTED TO BE COMPLETED FOR THIS DEVELOPMENT.
2. STOCKPILING OF MATERIALS SHALL OCCUR AS NEEDED THROUGHOUT CONSTRUCTION IN THE LOCATIONS SPECIFIED ON THE PLANS. ADDITIONAL STOCKPILING AREAS MAY BE CREATED IF NEEDED.
3. TRUCKING ROUTES SHALL BE VIA MAIN STREET AND THE NORTHERN ENTRANCE.
4. CONSTRUCTION SEQUENCING SHALL BE AS STATED IN THE SWPPP AND IN THE SEDIMENT AND EROSION CONTROL NOTES OF THESE PLANS.
5. EROSION CONTROLS SHALL BE CONSTRUCTED AND MAINTAINED AS SHOWN ON THESE PLANS. REGULAR INSPECTIONS SHALL ADDRESS ANY NEED FOR ADDITIONAL EROSION CONTROL MEASURES PER THE SWPPP.
6. CONSTRUCTION OPERATIONS SHALL BE LIMITED TO THE HOURS OF 7:00 AM THROUGH 6:00 PM ON MONDAYS THROUGH SATURDAY.
7. A SIGN SHALL BE PLACED AT THE ENTRANCE WITH CLEARLY VISIBLE 4" LETTERING STATING THE ACTIVITY HOURS AND THE FOLLOWING: "THERE SHALL BE NO LOADING/UNLOADING OR STACKING OF CONSTRUCTION EQUIPMENT AND MATERIALS OR IDLING OF DELIVERY TRUCKS DURING CONSTRUCTION ON THE ADJACENT STREETS. THERE SHALL BE NO IDLING OF DELIVERY TRUCKS DURING CONSTRUCTION EITHER WITHIN THE PROJECT SITE OR ADJACENT STREET. TRUCKS AND MACHINE IDLING AS GOVERNED BY MGL CHAPTER 90 SECTION 16-A."
8. A DUMPSTER IS TO BE MAINTAINED ON-SITE THROUGHOUT CONSTRUCTION. TRASH IS TO BE COLLECTED DAILY AND DEPOSITED IN THE DUMPSTER AND NO TRASH IS TO BE BURIED ON-SITE.
9. NOISE AND OTHER NUISANCE RESULTING FROM CONSTRUCTION SHALL BE CONTROLLED SO THAT THERE IS NO UNREASONABLE ADVERSE EFFECT ON THE ABUTTING PROPERTIES.
10. THE INFILTRATION FIELDS ARE NOT TO RECEIVE RUNOFF UNTIL THE SITE IS FULLY STABILIZED.
11. REFUELING AREAS SHALL BE LEVEL, UNDERLAIN WITH AN IMPERVIOUS BARRIER, AND BORDERED WITH BERM ON THE DOWNHILL SIDE.

1060 MAIN STREET
EROSION CONTROL
PLAN OF LAND
IN
MILLIS, MA

730 MAIN STREET
SUITE 2C
MILLIS, MA 02054
508-376-8883(o)

LEGACY ENGINEERING

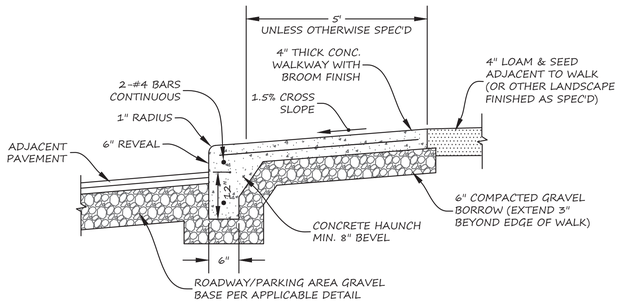

NOTES:

1. FOLLOW THIS DETAIL WHEREVER A CONCRETE SIDEWALK IS IMMEDIATELY ADJACENT TO A CURB.
2. ALL ASPECTS OF WALKWAY/SIDEWALK CONSTRUCTION SHALL BE IN FULL COMPLIANCE WITH 521 CMR.
3. PROVIDE CONTROL JOINTS EVERY 5' MIN.
4. PROVIDE PREMOLDED JOINT FILL EVERY 30' MIN.
5. PROVIDE 6x6 W1.4 x W1.4 - WELDED WIRE REINFORCEMENT MESH AT MIDDLE OF SLAB THICKNESS.

CONCRETE SIDEWALK WITH INTEGRAL CURB

(NO SCALE)

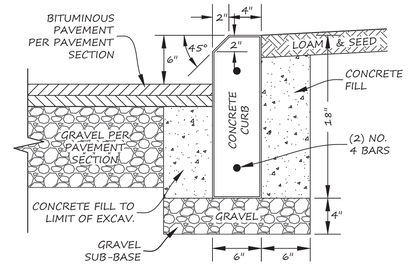

NOTES:

1. CONCRETE TO BE 4,000 PSI.
2. ALL RADII 50' AND SMALLER TO BE CONSTRUCTED USING CURVED SECTIONS.

PRECAST CONCRETE CURB DETAIL

(NO SCALE)

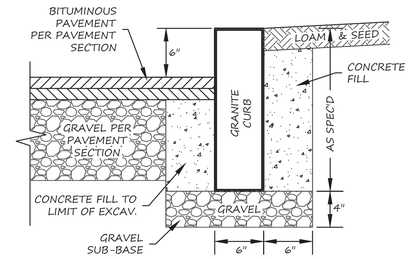

NOTES:

1. CONCRETE TO BE 4,000 PSI.
2. ALL RADII 50' AND SMALLER TO BE CONSTRUCTED USING CURVED SECTIONS.

VERTICAL GRANITE CURB DETAIL

(NO SCALE)

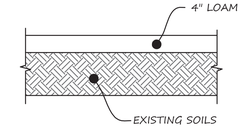

LOAM AND SEED DETAIL

NOT TO SCALE

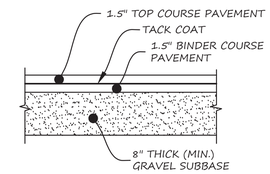

TYPICAL PARKING LOT PAVING SECTION

NOT TO SCALE

COMMONWEALTH OF MASSACHUSETTS
DANIEL J. MERRIKIN
CIVIL
No. 43309
REGISTERED PROFESSIONAL ENGINEER

Digitally signed by Daniel J. Merrikin, P.E.
Date: 2023.07.10 14:43:57 -04'00'

For Registry Use

OWNER
NEXGEN REALTY TRUST
20 PLEASANT STREET
MILLIS, MA 02054

APPLICANT
1060 MAIN ST. REALTY, LLC
10 SPRINGDALE AVENUE
DOVER, MA 02030

ZONING DISTRICT
C-V
MCEOD OVERLAY
NOT IN GNDWTR. PROT. DISTRICT

ASSESSORS PARCEL
23-96

DEED REFERENCE
BOOK 16088, PAGE 160

I CERTIFY THAT THIS PLAN HAS BEEN PREPARED IN CONFORMITY WITH THE RULES AND REGULATIONS OF THE REGISTERS OF DEEDS OF THE COMMONWEALTH OF MASSACHUSETTS.

I CERTIFY THAT THIS SURVEY AND PLAN CONFORMS TO THE ETHICAL, PROCEDURAL AND TECHNICAL STANDARDS IN THE COMMONWEALTH OF MASSACHUSETTS.

I HEREBY CERTIFY THAT THE PROPERTY LINES SHOWN ON THIS PLAN ARE THE LINES DIVIDING EXISTING OWNERSHIPS, AND THE LINES OF THE STREETS AND WAYS SHOWN ARE THOSE OF PUBLIC OR PRIVATE STREETS OR WAYS ALREADY ESTABLISHED, AND THAT NO NEW LINES FOR DIVISION OF EXISTING OWNERSHIP OR FOR NEW WAYS ARE SHOWN.

REGISTERED LAND SURVEYOR

PLAN SCALE: NOT TO SCALE

0'

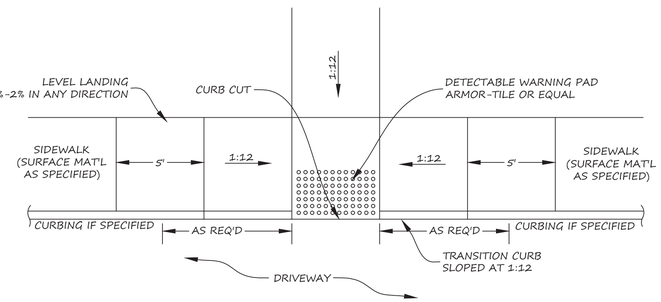

CURB CUT TYPE B

NOT TO SCALE

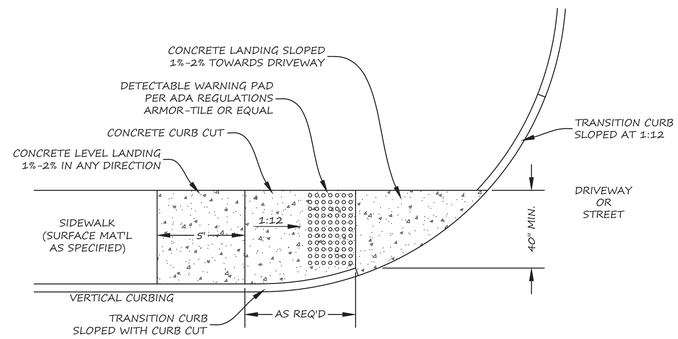

CURB CUT TYPE A

NOT TO SCALE

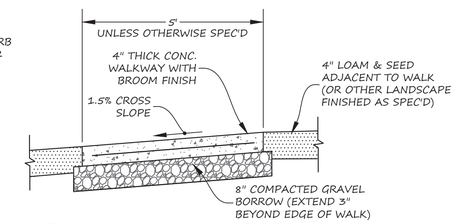

NOTES:

1. ALL ASPECTS OF WALKWAY/SIDEWALK CONSTRUCTION SHALL BE IN FULL COMPLIANCE WITH 521 CMR.
2. 4,000 PSI CONCRETE MIX
3. PROVIDE CONTROL JOINTS EVERY 5' MIN.
4. PROVIDE PREMOLDED JOINT FILL EVERY 30' MIN.
5. PROVIDE 6x6 W1.4 x W1.4 - WELDED WIRE REINFORCEMENT MESH AT MIDDLE OF SLAB THICKNESS.

CEMENT CONCRETE WALK/SIDEWALK

(NO SCALE)

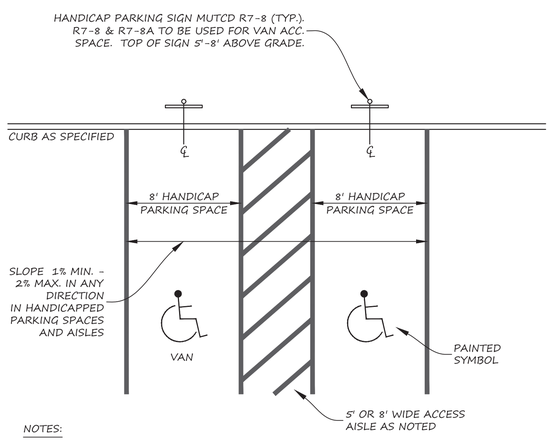

NOTES:

1. REFER TO THE LAYOUT PLAN FOR THE LOCATION, LAYOUT, AND NUMBER OF HANDICAP PARKING SPACES IN RELATION TO ADJOINING WALKWAYS.
2. HANDICAP PARKING SPACES AND ACCESSIBLE ROUTES (CURB CUTS, RAMPS, WALKWAYS, ETC...) SHALL BE IN ACCORDANCE WITH 521 CMR.

TYPICAL HANDICAP PARKING DETAIL

(NO SCALE)

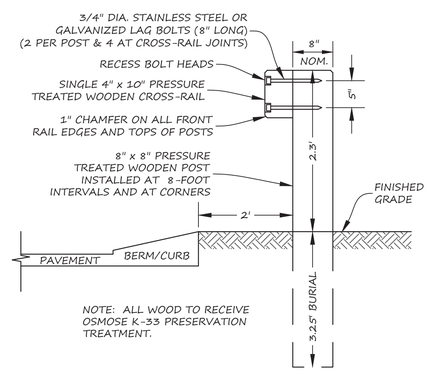

SIDE SECTIONAL VIEW

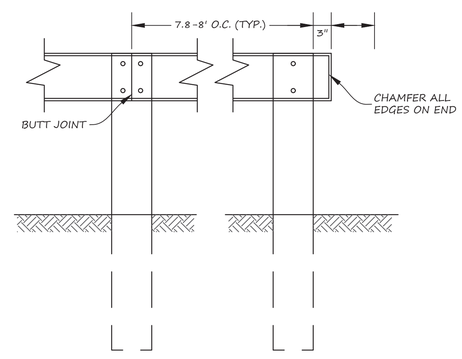

FRONT VIEW & TYPICAL END SECTION

WOOD GUARD RAIL DETAIL

NOT TO SCALE

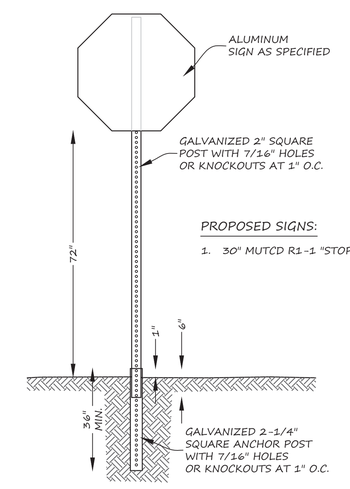

PROPOSED SIGNS:

1. 30" MUTCD R1-1 "STOP"

TYPICAL SIGN POST DETAIL

NOT TO SCALE

REVISION	DATE	BY

PLAN DATE: JULY 10, 2023

1060 MAIN STREET
DETAIL
PLAN OF LAND
IN
MILLIS, MA

730 MAIN STREET
SUITE 2C
MILLIS, MA 02054
508-376-8883(o)

LEGACY ENGINEERING

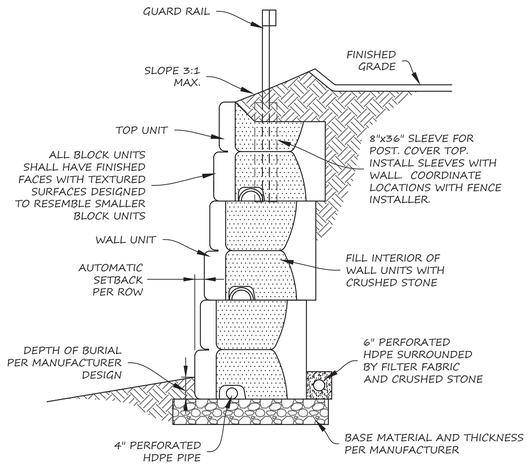

NOTES:

1. RETAINING WALL SHALL BE OF THE SO-CALLED "BIG-BLOCK" GRAVITY WALL SYSTEMS. THE SYSTEM DEPICTED ON THIS PLAN IS THE "STONE STRONG" SYSTEM MANUFACTURED BY STONE STRONG, LLC. ALTERNATIVE SYSTEMS MAY BE ALLOWED BY THE OWNER.
2. RETAINING WALL SYSTEMS SHALL BE DESIGNED BY THE PRODUCT MANUFACTURER. THE DETAILS ON THIS PLAN ARE APPROXIMATE ONLY AND SUBJECT TO CHANGE BASED ON THE FINAL DESIGN BY A REGISTERED PROFESSIONAL ENGINEER.
3. DAYLIGHT DRAIN PIPES AT EITHER END OF THE WALL.

RETAINING WALL TYPE A

NOT TO SCALE

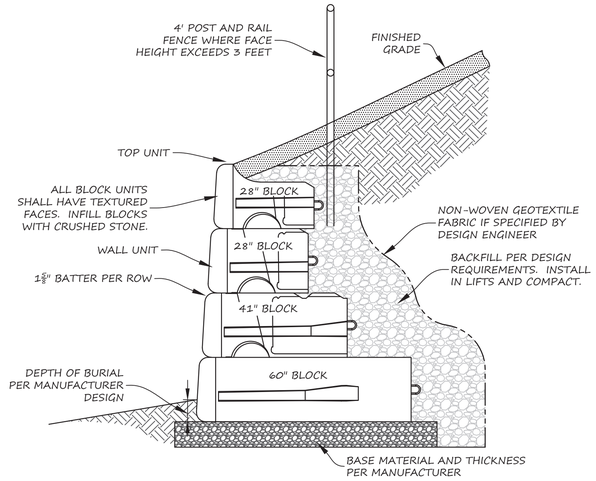

NOTES:

1. RETAINING WALL SHALL BE OF THE SO-CALLED "BIG-BLOCK" GRAVITY WALL SYSTEMS. THE SYSTEM DEPICTED ON THIS PLAN IS THE "REDI ROCK" SYSTEM. ALTERNATIVE SYSTEMS MAY BE ALLOWED IF APPROVED BY THE TOWN ENGINEER.
2. RETAINING WALL SYSTEMS SHALL BE DESIGNED BY THE PRODUCT MANUFACTURER. THE DETAILS ON THIS PLAN ARE APPROXIMATE ONLY AND SUBJECT TO CHANGE BASED ON THE FINAL DESIGN BY A REGISTERED PROFESSIONAL ENGINEER.
3. DAYLIGHT DRAIN PIPES AT EITHER END OF THE WALL.

RETAINING WALL TYPE B

NOT TO SCALE

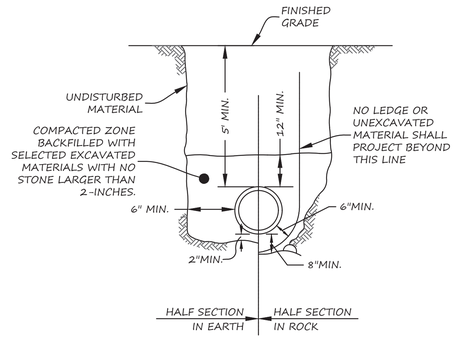

WATER MAIN TRENCH DETAIL

NOT TO SCALE

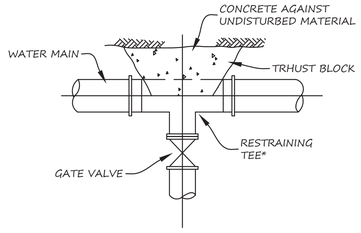

NOTE: MECHANICAL JOINT RESTRAINT SYSTEMS SUCH AS "MEGALUG" MAY BE USED SUBJECT TO APPROVAL BY THE DEPARTMENT OF PUBLIC WORKS/ENGINEERING DEPT.

TYPICAL LATERAL GATE VALVE CONNECTION DETAILS

NOT TO SCALE

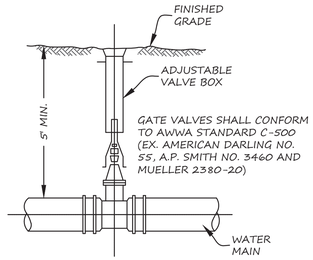

TYPICAL GATE VALVE

NOT TO SCALE

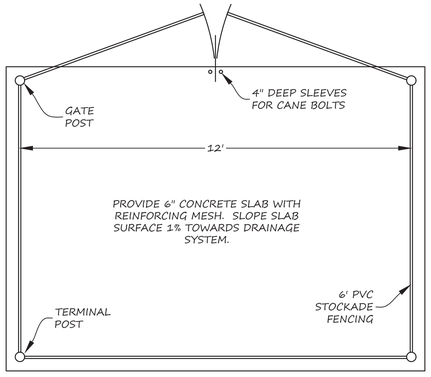

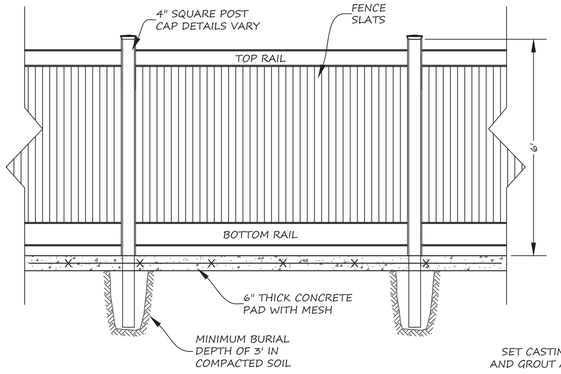

DUMPSTER ENCLOSURE PAD & FENCING DETAIL

(NO SCALE)

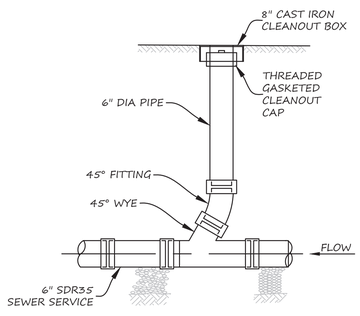

TYPICAL SEWER CLEANOUT DETAIL

NOT TO SCALE

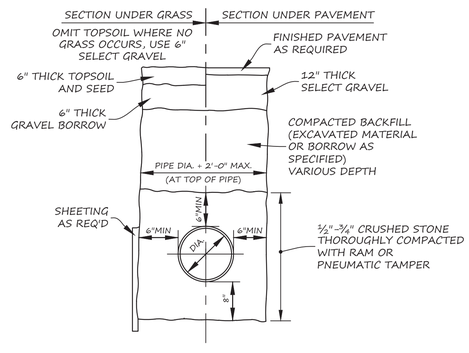

TYPICAL SEWER TRENCH

NOT TO SCALE

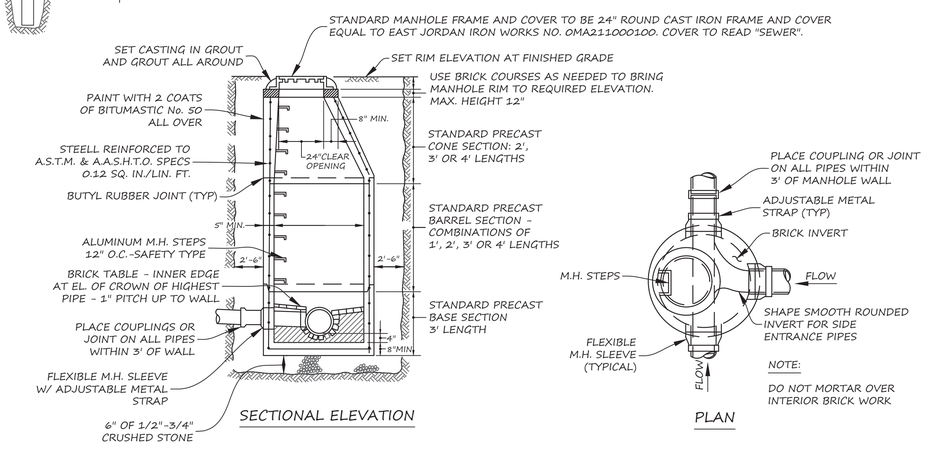

TYPICAL PRECAST CONCRETE MANHOLE DETAILS

NOT TO SCALE

COMMONWEALTH OF MASSACHUSETTS
DANIEL J. MERRIKIN
CIVIL
No. 43309
REGISTERED PROFESSIONAL ENGINEER

Digitally signed by Daniel J. Merrikin, P.E.
Date: 2023.07.10 14:43:42 -04'00'

For Registry Use

OWNER
NEXGEN REALTY TRUST
20 PLEASANT STREET
MILLIS, MA 02054

APPLICANT
1060 MAIN ST. REALTY, LLC
10 SPRINGDALE AVENUE
DOVER, MA 02030

ZONING DISTRICT
C-V
MCEOD OVERLAY
NOT IN GNDWTR. PROT. DISTRICT

ASSESSORS PARCEL
23-96

DEED REFERENCE
BOOK 16088, PAGE 160

I CERTIFY THAT THIS PLAN HAS BEEN PREPARED IN CONFORMITY WITH THE RULES AND REGULATIONS OF THE REGISTERS OF DEEDS OF THE COMMONWEALTH OF MASSACHUSETTS.

I CERTIFY THAT THIS SURVEY AND PLAN CONFORMS TO THE ETHICAL, PROCEDURAL AND TECHNICAL STANDARDS IN THE COMMONWEALTH OF MASSACHUSETTS.

I HEREBY CERTIFY THAT THE PROPERTY LINES SHOWN ON THIS PLAN ARE THE LINES DIVIDING EXISTING OWNERSHIPS, AND THE LINES OF THE STREETS AND WAYS SHOWN ARE THOSE OF PUBLIC OR PRIVATE STREETS OR WAYS ALREADY ESTABLISHED, AND THAT NO NEW LINES FOR DIVISION OF EXISTING OWNERSHIP OR FOR NEW WAYS ARE SHOWN.

REGISTERED LAND SURVEYOR

PLAN SCALE: NOT TO SCALE
0'

PLAN DATE: JULY 10, 2023

REVISION	DATE	BY

1060 MAIN STREET
DETAIL
PLAN OF LAND
IN
MILLIS, MA

730 MAIN STREET
SUITE 2C
MILLIS, MA 02054
508-376-8883(o)

LEGACY ENGINEERING

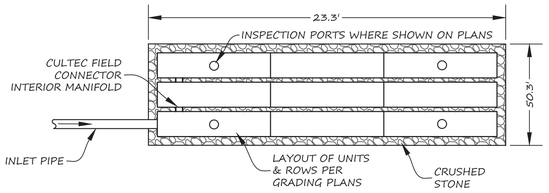

FIELD PLAN VIEW

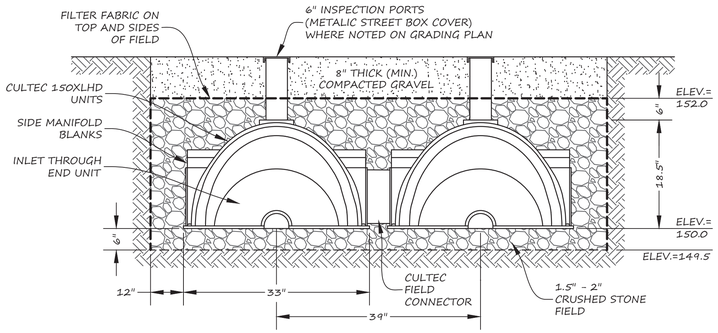

SECTION THROUGH TYPICAL LEACHING FIELD

NOTES:

1. INFILTRATION TRENCH UNITS TO BE RECHARGER 150XLHD AS MANUFACTURED BY CULTEC, INC., 878 FEDERAL ROAD, BROOKFIELD, CT 06804, OR APPROVED EQUAL. APPROVED EQUALS MUST CONTAIN AT LEAST THE SAME TOTAL SYSTEM STORAGE VOLUME AND BOTTOM AREA.
2. INSTALLATION SHALL BE IN ACCORDANCE WITH MANUFACTURER RECOMMENDATIONS.
3. TWO-TRENCH SYSTEM CROSS-SECTION SHOWN. MULTIPLE TRENCHES WOULD USE THE SAME EXTERIOR STONE THICKNESS AND INTERIOR CHAMBER SEPARATION VALUES.
4. INFILTRATION TRENCH UNITS SHALL BE ABLE TO WITHSTAND H-20 LOADINGS.

INFILTATION TRENCH/FIELD DETAIL

NOT TO SCALE

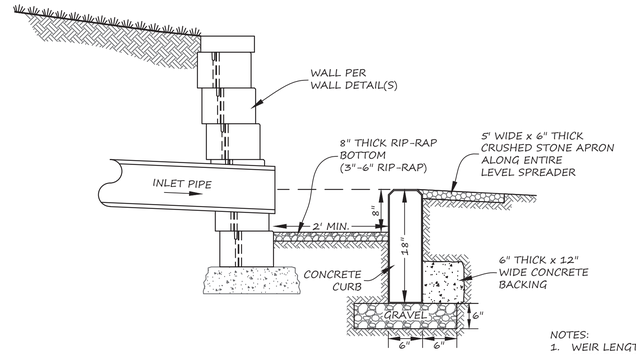

TYPICAL SECTIONAL VIEW

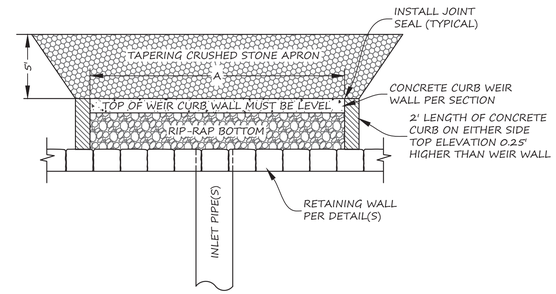

PLAN VIEW

NOTES:

1. WEIR LENGTH (A) SHALL BE AS SPECIFIED ON THE GRADING AND/OR PROFILE SHEETS.
2. WEIR LIP SHALL FOLLOW EXISTING GRADES AS CLOSELY AS POSSIBLE.

LEVEL SPREADER DETAIL

NOT TO SCALE

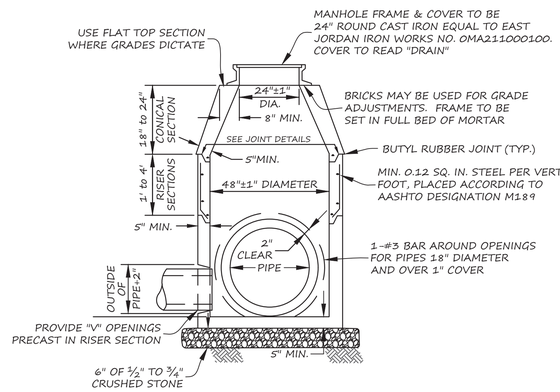

NOTES:

1. MANHOLE DIAMETER SHALL BE INCREASED IF NUMBER, SIZE, AND CONFIGURATION OF INLET/OUTLET PIPING NECESSITATES A LARGER MANHOLE DIAMETER.
2. SUBSTITUTE FRAME AND COVERS SHALL BE MADE IN USA AND SHALL BE APPROVED BY THE ENGINEERING DEPARTMENT OR PLANNING BOARD PRIOR TO CONSTRUCTION.

PRECAST CONCRETE DRAIN MANHOLE

NOT TO SCALE

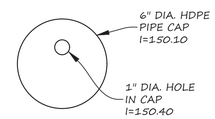

NOTES:

- JOINT AND CAP ARE TO BE WATERTIGHT.
- INSTALL CAP ON THE 6" PIPE OUTLET WITHIN THE DMH.

DMH#1 PIPE CAP DETAILS

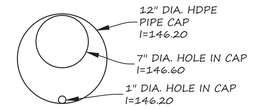

NOTES:

- JOINT AND CAP ARE TO BE WATERTIGHT.
- INSTALL CAP ON THE 12" PIPE OUTLET WITHIN THE DMH.

DMH#2 PIPE CAP DETAILS

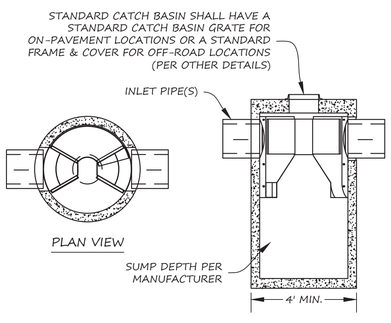

NOTES:

1. FIRST DEFENSE UNITS SHALL BE DESIGNED FOR HS20 LOADING.
2. ALL FIRST DEFENSE UNITS EQUIPPED WITH CATCH BASIN GRATES SHALL BE EQUIPPED WITH THROATSTONES.

FIRST DEFENSE TREATMENT UNIT

NOT TO SCALE

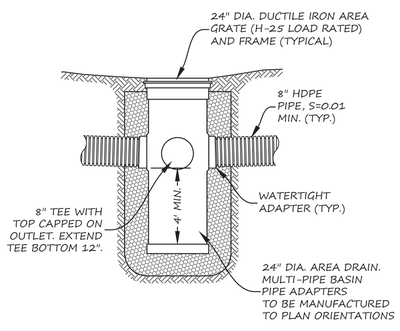

AREA DRAIN (A.D.) DETAIL

NOT TO SCALE

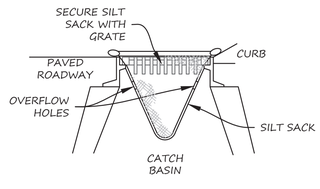

CATCH BASIN SILT SACK DETAIL

NOT TO SCALE

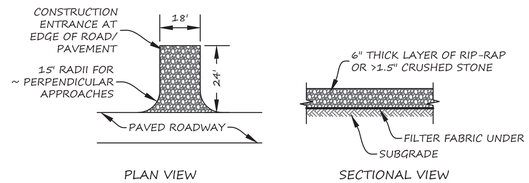

NOTES:

1. ENTRANCE SHALL BE INSTALLED BEFORE ANY EXCAVATION WORK OCCURS ON-SITE.
2. ENTRANCE SHALL BE MAINTAINED IN GOOD CONTITION UNTIL A PAVED DRIVEWAY IS INSTALLED. REPLACE ENTRANCE IF FILLED WITH SOILS OR IF SOILS ARE BEING TRACKED ONTO ADJACENT ROADWAYS.

CONSTRUCTION ENTRANCE DETAIL

NOT TO SCALE

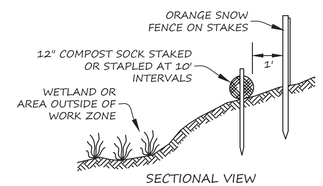

NOTE: NON-BIODEGRADABLE SOCK SHELL FILLED WITH COMPOST MEDIA. JOINTS SHALL BE OVERLAPPED BY AT LEAST TWO FEET. ORANGE SNOW FENCE IS ONLY NEEDED IF THERE IS EVIDENCE OF THE COMPOST SOCK BEING BURIED BY CONSTRUCTION ACTIVITIES.

EROSION CONTROL DETAIL (COMPOST SOCK)

NOT TO SCALE

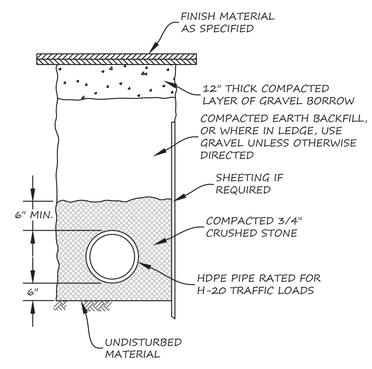

TYPICAL DRAIN TRENCH

(NO SCALE)

COMMONWEALTH OF MASSACHUSETTS
DANIEL J. MERRIKIN
CIVIL
No. 43309
REGISTERED PROFESSIONAL ENGINEER

Digitally signed by Daniel J. Merrikin, P.E.
Date: 2023.07.10 14:43:23 -04'00'

For Registry Use

OWNER
NEXGEN REALTY TRUST
20 PLEASANT STREET
MILLIS, MA 02054

APPLICANT
1060 MAIN ST. REALTY, LLC
10 SPRINGDALE AVENUE
DOVER, MA 02030

ZONING DISTRICT
C-V
MCEOD OVERLAY
NOT IN GNDWTR. PROT. DISTRICT

ASSESSORS PARCEL
23-96

DEED REFERENCE
BOOK 16088, PAGE 160

I CERTIFY THAT THIS PLAN HAS BEEN PREPARED IN CONFORMITY WITH THE RULES AND REGULATIONS OF THE REGISTERS OF DEEDS OF THE COMMONWEALTH OF MASSACHUSETTS.

I CERTIFY THAT THIS SURVEY AND PLAN CONFORMS TO THE ETHICAL, PROCEDURAL AND TECHNICAL STANDARDS IN THE COMMONWEALTH OF MASSACHUSETTS.

I HEREBY CERTIFY THAT THE PROPERTY LINES SHOWN ON THIS PLAN ARE THE LINES DIVIDING EXISTING OWNERSHIPS, AND THE LINES OF THE STREETS AND WAYS SHOWN ARE THOSE OF PUBLIC OR PRIVATE STREETS OR WAYS ALREADY ESTABLISHED, AND THAT NO NEW LINES FOR DIVISION OF EXISTING OWNERSHIP OR FOR NEW WAYS ARE SHOWN.

REGISTERED LAND SURVEYOR

PLAN SCALE: NOT TO SCALE

0'

PLAN DATE: JULY 10, 2023

REVISION	DATE	BY

1060 MAIN STREET
DETAIL
PLAN OF LAND
IN
MILLIS, MA

730 MAIN STREET
SUITE 2C
MILLIS, MA 02054
508-376-8883(o)

LEGACY ENGINEERING